FAST MOVING TECHNOLOGY

Fork Connectors for Blind Mating

Slide-inline | Industrial connectors

INTRODUCTION

Connections for High Power Busbars

Modular industrial equipment typically relies on blind mate connectors to allow the modular sub-assembly to be connected and disconnected within the cabinet.
Many of these designs utilize a common busbar system inside the cabinet or flexible knife to connect power to the sub-assemblies. A fork style connector, often in multiples for 3 phase power, works well in this type of blind mate connection, allowing for a compact, high current density connection, free of end-user interaction.

This series of high current fork connectors was developed to fit the Inch sized busbars common in North America. The fork profile is scalable for a variety of power handling capabilities by increasing the length and selecting the appropriate MULTILAM. Depending on the application, different MULTILAM contact bands can be utilized; LAI-GSR for lower current and cost requirements, LA-CUT featuring higher axial misalignment tolerance and LA-CUD for the maximum possible impulse currents.
Each profile is available in standard configuration options to allow designers to select fork connectors from off-the-shelf solutions. If an existing standard configuration doesn't fit the application or design requirements Staubli is able to modify the design to accommodate the external geometry or termination style needed, either based on the existing profiles or by creating a new extrusion profile. Multiple base material, plating and MULTILAM options are available to fit most application requirements from busbar thickness of 1/8" to 3/4" with standard profiles. Additional sizes possible upon request.

Market / Applications:
- Industrial Automation
- Power Conditioning
- Power Inverter
- Data Center
- Induction Motor Drive
- Power Supply
- Battery Bank
- Signal Conditioning
- Drawout Circuit Breaker
- Automatic Transfer Switch
- Test Bench

Staubli has many years of experience with fork connectors and are ready to assist you with your connector needs.
For further information, please contact our field sales engineers: www.staubli.com/electrical

More Information on our Metric Fork Connectors can be found in our catalog "Plug-in Systems Main catalog" (formerly Slide-inline).

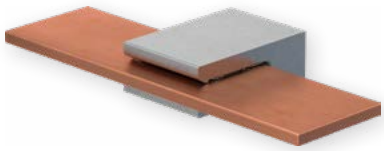

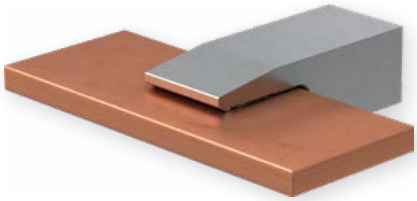

Various fork profile options featuring MULTILAM

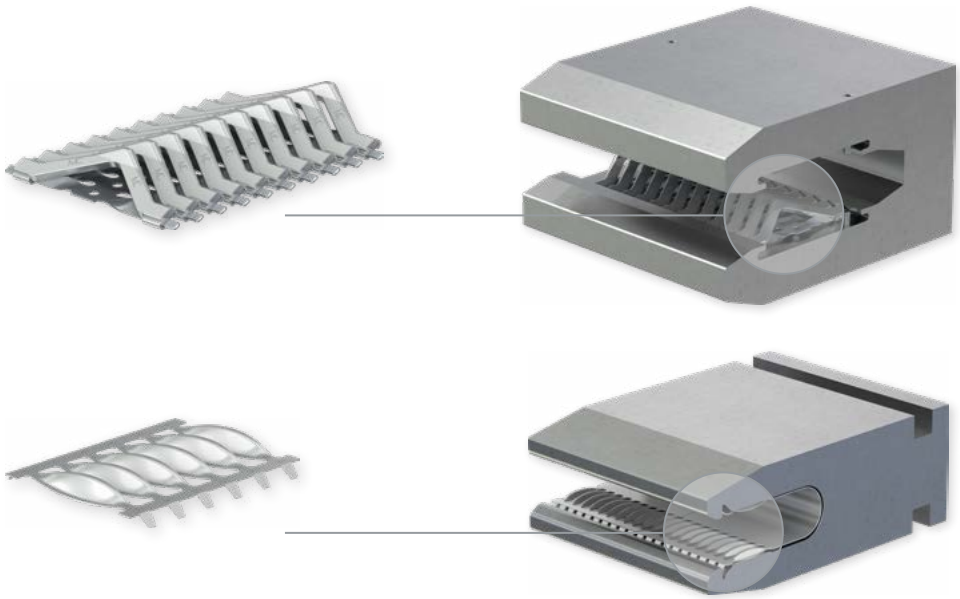

Various termination and mounting possibilities

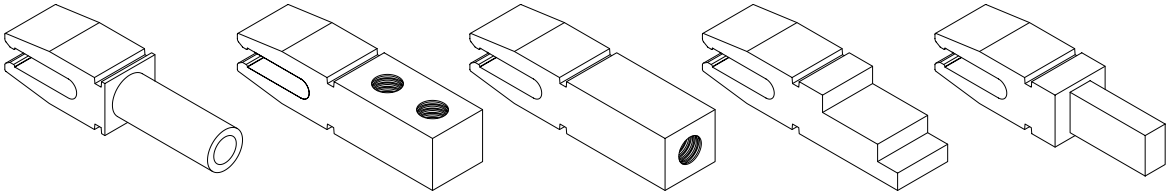

- Threaded termination standard
- Crimp termination available upon request
- Custom profiles available upon request

FORK CONNECTORS

1/8" Fork Connectors

Standard Options

52000115

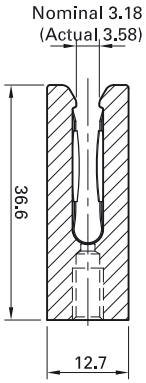

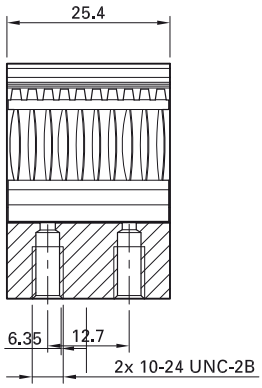

52000523

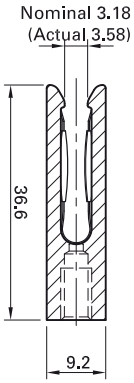

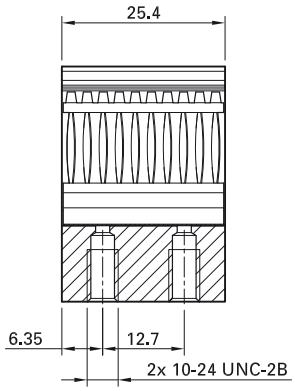

52000526

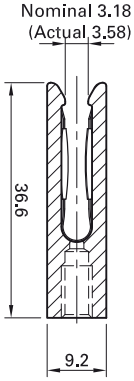

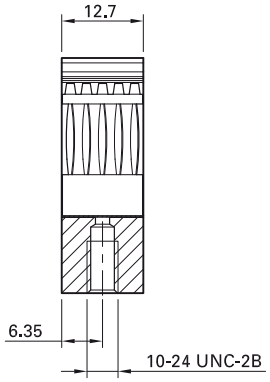

Order No.	Designation	MULTILAM	Material
52000115	1/8" GSR3.18K/25.4/10-24 Al	LAI-GSR	Al, Silver plated
52000523	1/8" GSR3.18K/25.4/10-24 CuZn	LAI-GSR	CuZn, Silver plated
52000526	1/8" GSR3.18K/12.7/10-24 CuZn	LAI-GSR	CuZn, Silver plated

3/16" Fork Connectors

Standard Options

52000580

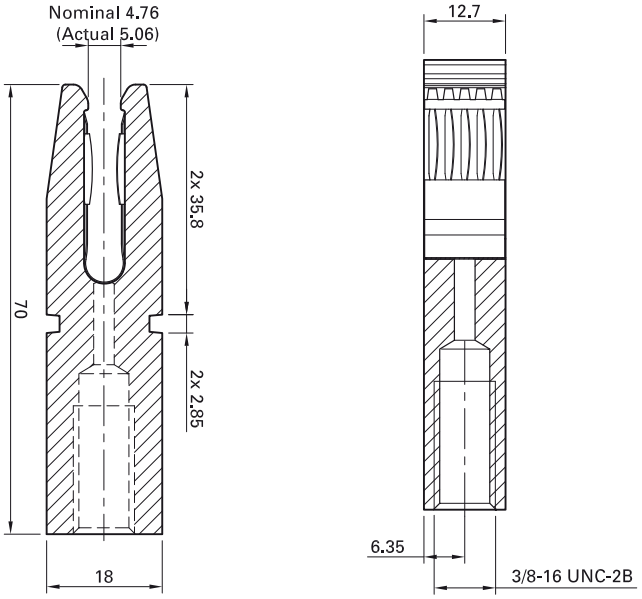

52000583

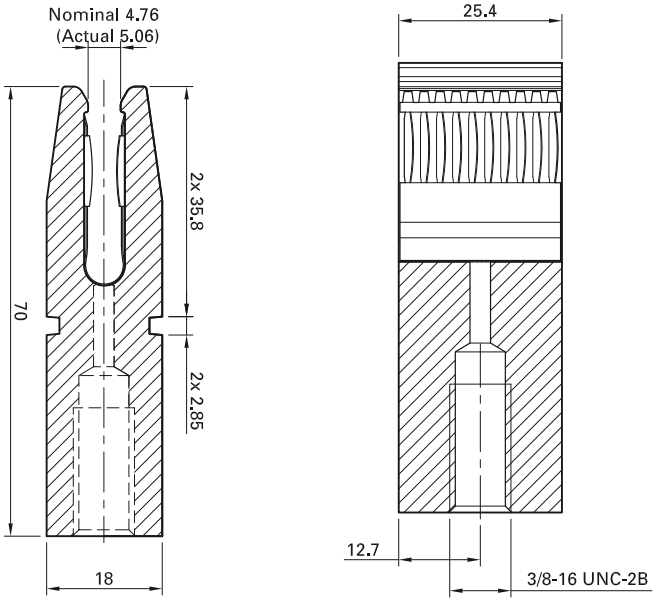

Order No.	Designation	MULTILAM	Material
52000580	3/16" GSR4.76/12.7/3/8-16 Al	LAI-GSR	Al, Silver plated
52000583	3/16" GSR4.76/25.4/3/8-16 Al	LAI-GSR	Al, Silver plated

1/4" Fork Connectors

Standard Options

52000562

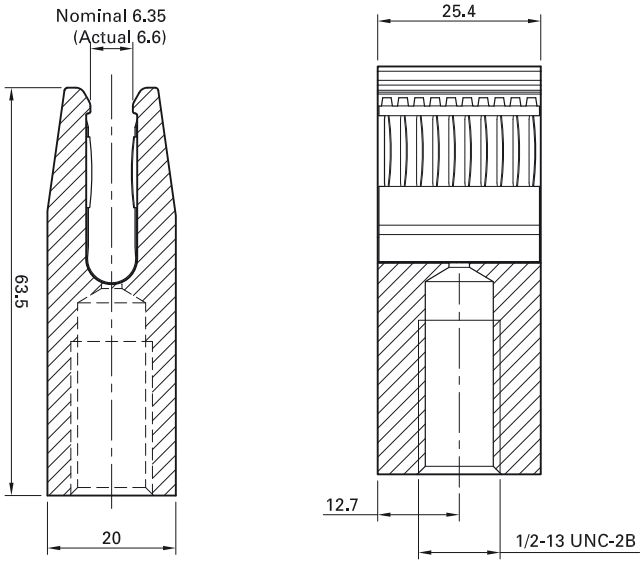

52000565

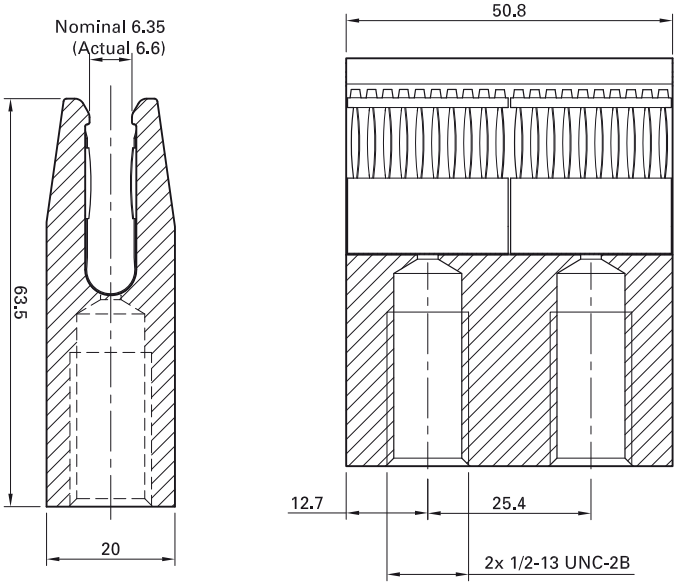

Order No.	Designation	MULTILAM	Material
52000562	1/4" GSR6.35/25.4/1/2-13 Al	LAI-GSR	Al, Silver plated
52000565	1/4" GSR6.35/50.8/1/2-13 Al	LAI-GSR	Al, Silver plated

3/8" Fork Connectors

Standard Options

52000573

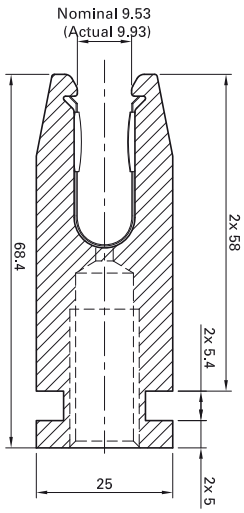

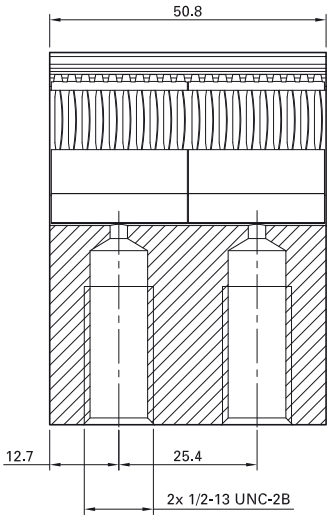

52000597

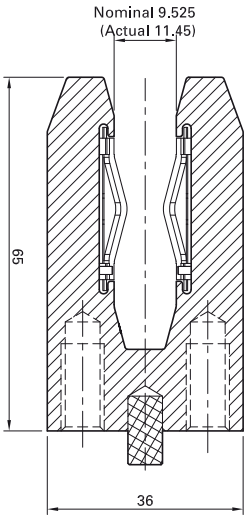

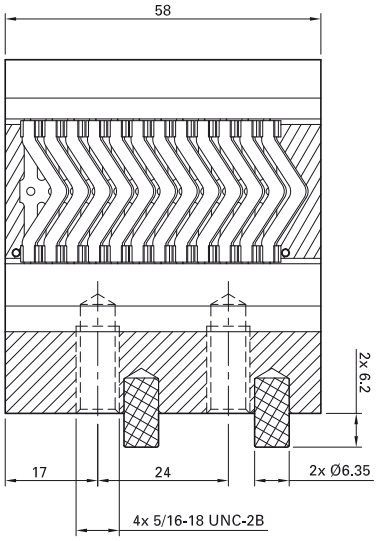

Order No.	Designation	MULTILAM	Material
52000573	3/8" GSR9.53/50.8/1/2-13 Al	LAI-GSR	Al, Silver plated
52000597	3/8" GSR9.53/LA-CUT/58UN	LAI-CUT[1)]	Al, Silver plated

[1)] For increased mechanical capabilities

Overview

*	General Description	Profile part number	Profile Description	Types of MULTILAM	Connector material	Resistance per unit length: µOhm per inch
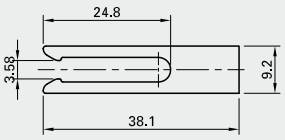	Fork Profile 1/8"	**52000520**	P-GSR3.18	LAI/0.2	CuZn	20
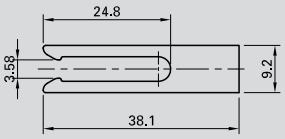	Fork Profile 1/8"	**52001426**	P-GSR3.18	LA/0.2	Al	20
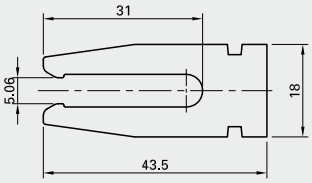	Fork Profile 3/16"	**52000527**	P-GSR4.76	LAI/0.2	Al	20
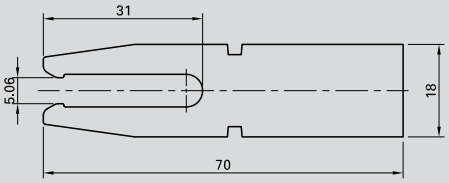	Fork Profile 3/16"	**52000574**	P-GSR4.76N	LAI/0.2	Al	20
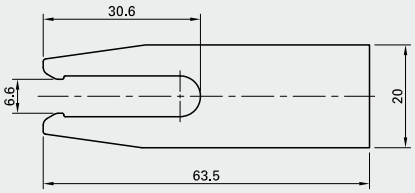	Fork Profile 1/4"	**52000559**	P-GSR6.35	LAI/0.2	Al	20
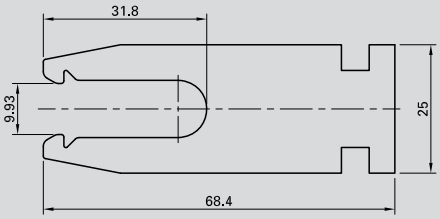	Fork Profile 3/8"	**52000570**	P-GSR9.53	LAI/0.2	Al	20
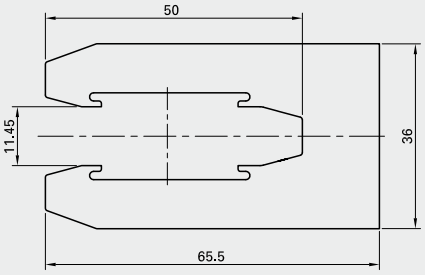	Fork Profile 3/8"	**52000594**	P-GSR9.53	LA-CUT	Al	40

* Connector Profiles not for individual sale. For design reference ONLY

TECHNICAL INFORMATION

Technical Information

Integration

Installations of fork connectors have to be made flexible so that the floating mounting of the fork connector body in the insulating housing is not impaired. When the fork connector is used without insulating housing, at least one side; ideally both sides must be terminated and fastened in a floating manner.

Busbar

All technical details stated for the standard profiles are with copper busbar with a silver plated contact area and a thin film of lubricant applied. For applications without silver plating or with aluminum busbar; the technical values are derated for the increase in contact and/ or conductor resistance. Standard fork connector options are intended for use in indoor installations or protected outdoor locations; they are not suitable for use in a corrosive atmosphere.

Special material and plating can be selected depending on the environment and application needs.

Please inquire, we'll be glad to advise you.

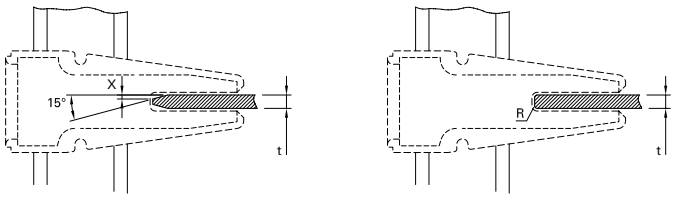

Busbars – Thickness "t"				Busbars – Leading Edge			
Nominal		Tolerance		with Chamfer "X"		with Radii, "R"	
inches	mm	inches	mm	inches	mm	inches	mm
0.125 (1/8)	3.175	±0.005	±0.127	0.040	1.0	0.031	0.8
0.188 (3/16)	4.76	±0.005	±0.127	0.040	1.0	0.031	0.8
0.250 (1/4)	6.35	±0.005	±0.127	0.060	1.5	0.063	1.6
0.375 (3/8)	9.525	±0.005	±0.127	0.060	1.5	0.063	1.6
0.375 (3/8)	9.525	±0.005	±0.127	0.080	2.0	0.063	1.6

MULTILAM type

For a technical description of electrical connectors with MULTILAM, see publication: "The MULTILAM principle".

Plating

Copper and aluminum busbars should be plated with a thin layer of silver. Nickel underplating is recommended for higher mating cycle applications.

Lubrication

Application of contact grease to the busbar is highly recommended.

Lubricant

Staubli recommends the following lubricants:

- KlüberTemp GR UT 18 (73.1059)*
- Kontasynth BA100 Spray (73.1051)*

Sliding grease in SF6-gas:

- Barrierta I EL-102*

Assembly and sealing grease:

- Barrierta I S-402 or Barrierta I MI-202*

Withdrawal and mating forces

Values listed refer to forces after 20-30 mating cycles with a thin film of lubricant present. Forces are higher in the new condition.

Tightening torques

Torque values are for clean, lightly lubricated bolts, nuts and washers.

Contact resistance

The contact (transition) resistance is the resistence occuring at the contact point of two contact surfaces.

* from Klüber Lubrication, München

Voltage Drop
The upper limit used to determine the rated current of the connector is calculated using Ohm's Law; V=IxR and is limited to 12.5mV as defined by Staubli.

Rated Current
(IEC 61984) Current value determined by Staubli which the connector can carry continuously (without interruption) with the largest specified conductor, at an ambient temperature of 20 °C, without the upper limiting temperature or voltage drop being exceeded. (Final temperature up to 80 °C; rise 60°C).

Rated peak withstand current
Rated peak withstand current as defined by IEC 60909:1988.

Mating cycles
The maximum number of mating cycles of the standard connector is between 1000 and 5000, depending on duty conditions. Precondition is a thin film of lubricant on the contacts prior to initial mating. Since higher mating cycles call for special surface treatment, guiding and lubrication measures, each case must be individually investigated to establish the required measures. Please inquire, we'll be glad to advise you.

Crimp terminations
We recommend hexagonal crimping for our crimp sleeves for terminating to stranded conductors. Staubli crimp sleeves are designed for Class 5 flexible or Class 6 highly flexible conductors according to IEC 60228. Cables with compact conductors need a special crimping sleeve, please inquire for details.

Protection against electrical shock
For an uninsulated connector, protection against electric shock must be provided by the enclosure of the end product, in which the connector is installed following the applicable standards. See "safety notes" section.

Safety notes

Fundamental rule of protection against electric shock
[IEC 61140 Pt. 4]
Hazardous-live-parts shall not be accessible and accessible conductive parts shall not be dangerous to touch:

- either under normal conditions (operation in intended use and in the absence of a fault,
- or under single-fault conditions, e. g. failure of basic insulation.

UL 1977 "Component connectors for use in data, signal control and power applications"
There shall be an air- or creepage distance over surface of 3.2 mm (1/8 inch) or more for a an uninsulated live part of opposite polarity.

a) an uninsulated live part of opposite polarity.
b) an uninsulated grounded metal part.
c) a non-current carrying metal part that is exposed to contact by persons when the device is installed and used in the intended manner.

IEC 61984 "Connectors – Safety requirements and tests"
This international standard applies to connectors with rated voltages above 50 V and up to 1000 V and rated currents up to 125 A per contact, for which either no detailed specification (DS) exists for which the DS refers to this standard with regard to safety.

Extracts from IEC 61984: June 2001 and remarks
1) Connectors
Connectors should not be under voltage or under load/current when connection is made. An electrical or mechanical interlock prevent the contacts of a connector from becoming live before it is in proper engagement, or from being withdrawn while its contacts are live. An interlock can be obtained by micro switch.

Protection against electric shock for unenclosed connectors.
Protection against electric shock is provided by the customer by the enclosure of the equipment in which the connector is mounted. Or a safety extra low voltage (SELV) is applied.

Protection against electric shock for enclosed connectors

- Mated condition: clearance and creepage distances are measured between live parts and the IEC probe with a test force of 20 N.

- Unmated condition, contact openings (lead-ins) in the mating face: clearance and creepage distances are not taken into account.

For a plug connector, clearance and creepage distances shall be measured through openings between the live parts and the plane of the mating face.

2) Plug device

During connection or disconnection, contacts are under voltage only; however, the contacts are not under load, they carry no current. Plug devices must have the stated breaking capacity or must be so designed that they can only be inserted and withdrawn without load (current). This can be achieved by an interlock device such as a micro switch.

- Mated condition: clearance and creepage distances must be measured between live parts and the IEC test probe.
- Unmated condition: contact openings (lead-in) clearance and creepage distances are measured between live parts and the mating face plane of the plug device. This does not apply to the male part of the connector.

3) Connector with breaking capacity (CBC)

Contacts are under voltage and current (load) during connection and disconnection. Stäubli plug devices are not suitable for connection or disconnection under load. No breaking capacity can be specified.

Customized knife design

Stäubli can provide the mating knife contacts in the following configurations

(All knife designs are customized to the end-user application)

Knife with bolted termination

Knife with flat, flexible braid

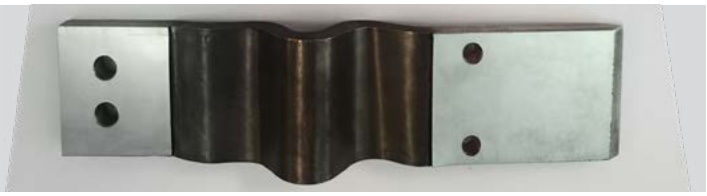

Knife with laminated Busbar

Knife with multiple stranded round conductors

■ Stäubli Units ○ Agents

Global presence of the Stäubli Group

www.staubli.com

Staubli is a trademark of Stäubli International AG, registered in Switzerland and other countries.
We reserve the right to modify product specifications without prior notice. © Stäubli 2019.
ec.marcom@staubli.com | Photo credits: Stäubli

IS SL ForkPlugs 11014171-us B 11.2019